APPLICATION NOTE

PARALLELING *TU425-SERIES* POWER SUPPLIES FOR LOAD SHARING

Purpose:

This application note provides information concerning parallel operation of the SLPE ***TU425-SERIES*** series power supplies. Parallel operation offers the ability to have redundancy for increased reliability or to increase total power available to a load. Parallel operation can also be used for power management by enabling and inhibiting units connected in parallel.

Description:

Load sharing, or current sharing, is the ability of power supplies to share the load in a proportional manner. This ensures relatively even thermal and electrical stress among the paralleled units. It also allows for optimum performance during load changes and transient conditions.

This application note is specific to the TU425 series products however it offers recommendations for paralleling power supplies in general.

WIRING CONFIGURATIONS AND BEST PRACTICES

Basic Connections - Star Wiring Scheme:

Although there are various ways to configure load sharing with parallel power supplies, the star wiring method is recommend. In the proceeding figures, three star wiring schemes are illustrated that provide options for the desirable level of redundancy.

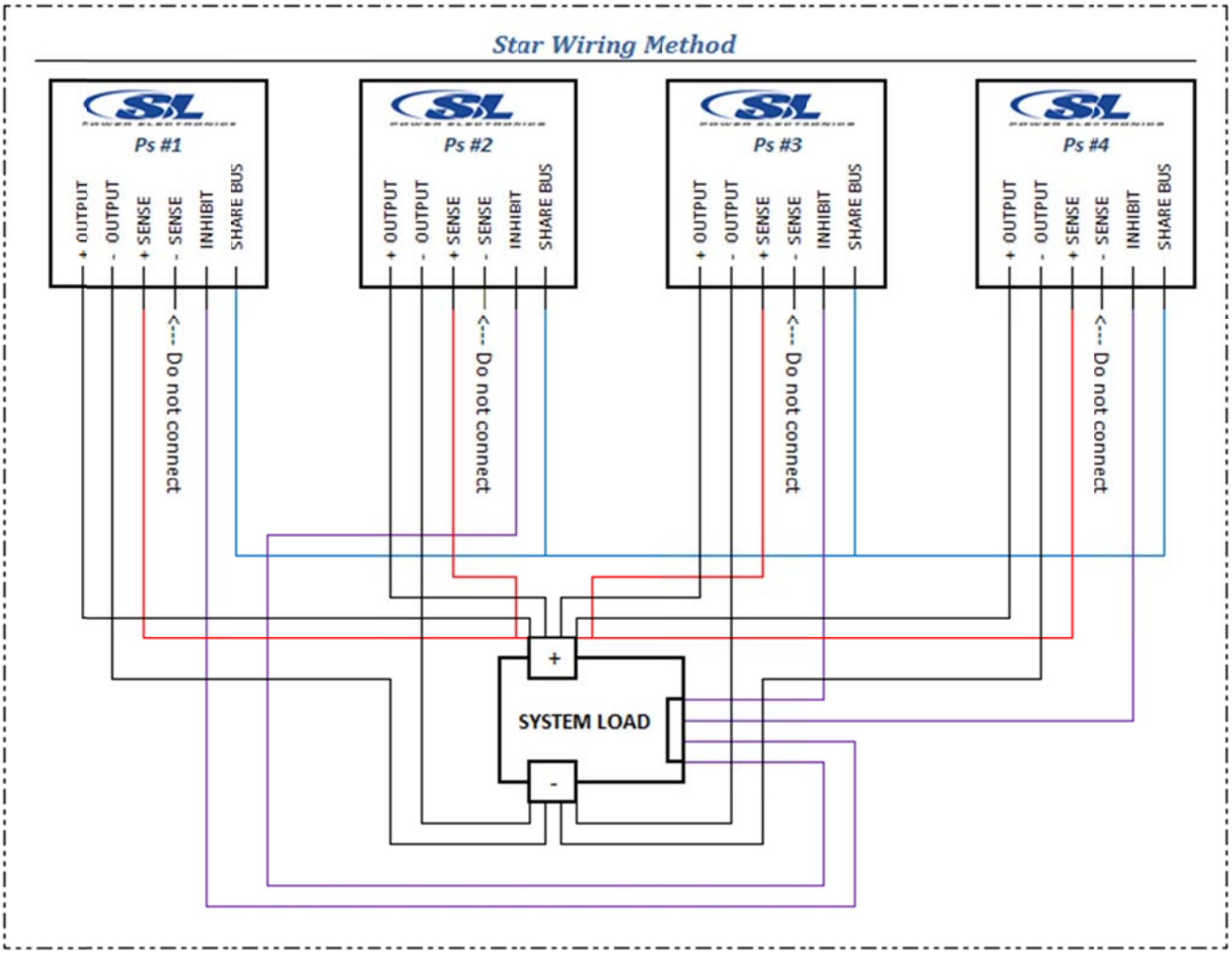

Figure 1

This method above in figure 1 demonstrates a star wiring scheme that offers a basic level of redundancy without the inclusion of extra components that are not strictly necessary for a load sharing function.

Enhanced Reliability - Diode OR'ing Wiring Scheme:

For mission critical systems demanding higher reliability, additional redundancy to protect from power supply output circuitry faults is needed. This can be achieved by adding OR'ing devices. Figure 2 shows a configuration using diodes to isolate each power supply from the common load bus. This is less efficient than using OR'FET's but is also less complex and less expensive. This is not recommended for low voltage or high current applications due to the diode power losses.

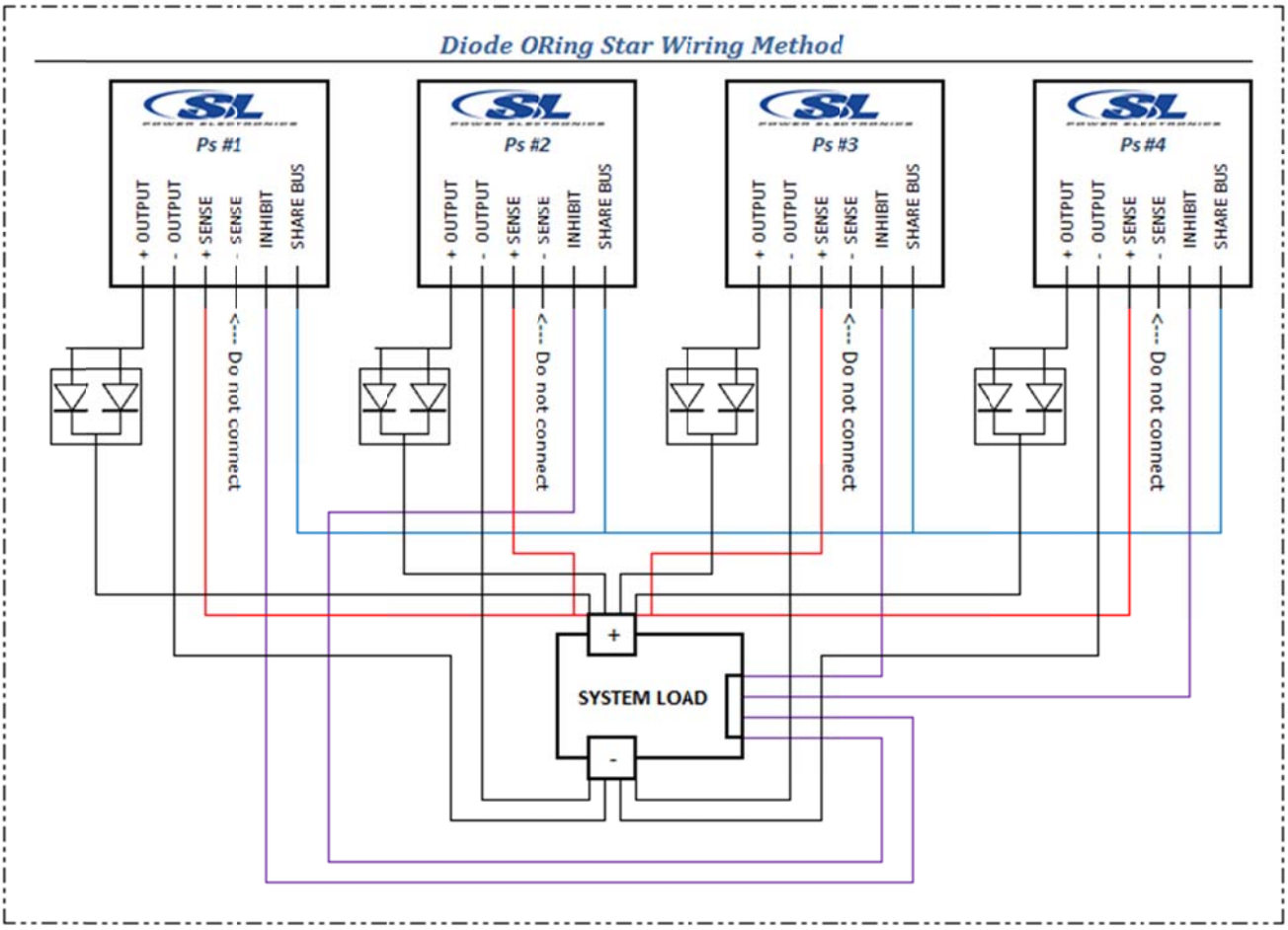

Figure 2

This diode OR'ing configuration above in figure 2 provides an additional redundancy option that is simple and less expensive than the OR'ing FET method.

Enhance Reliability - MosFet OR'ing Wiring Scheme:

Although, OR' ing diodes are an effective way to achieve a higher level of redundancy, the diodes dissipate more heat than properly selected OR'ing FET's and for high current applications, will likely be more space efficient also.

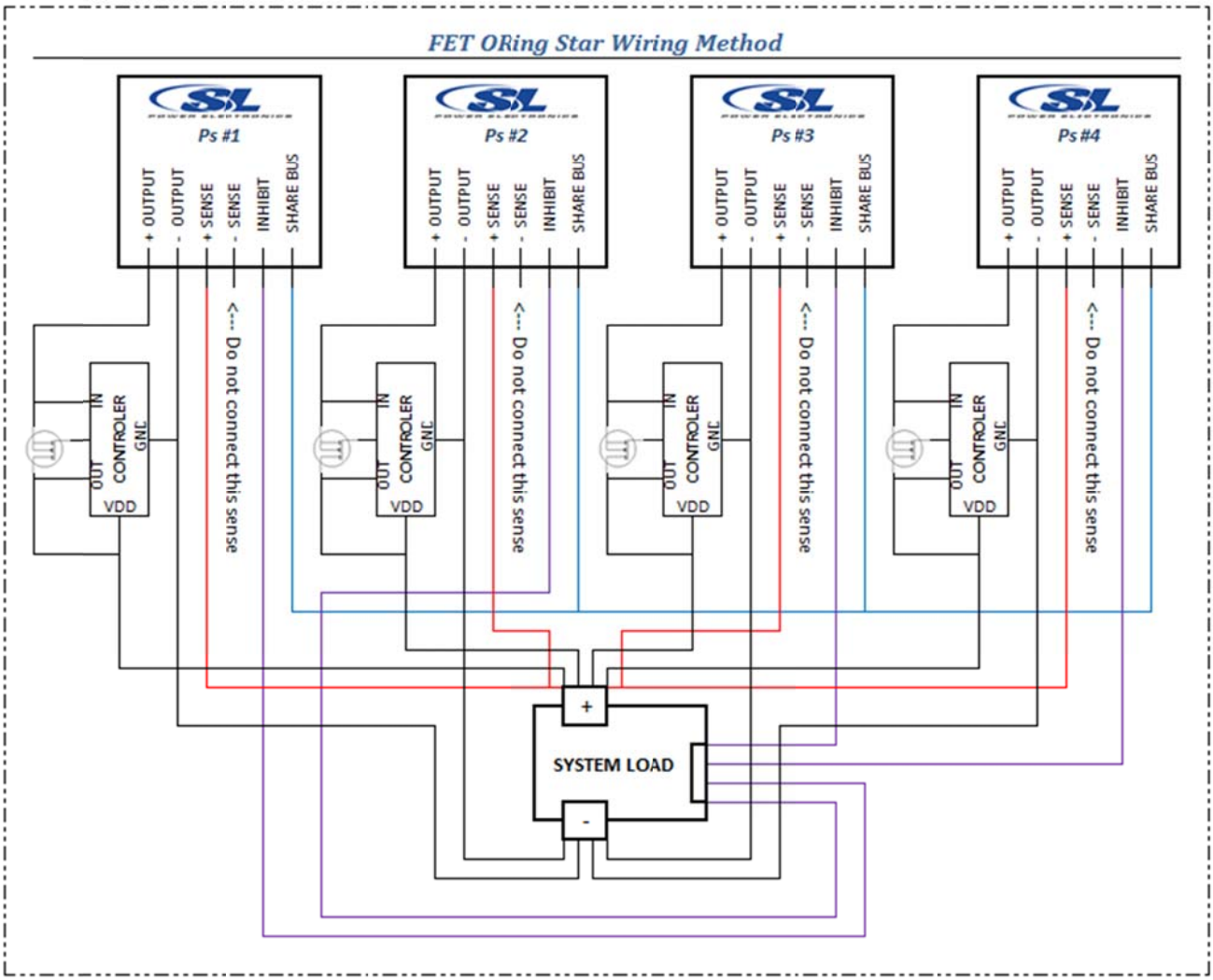

Figure 3: OR'ing FET configuration is well suited for low voltage or high current applications where additional fault protection is needed. The OR'ing devices protect against short or low impedance faults in the output section of the power supplies.

This scheme consists of the same basic OR'ing star wiring method along with OR'ing FET's and OR'ing FET controllers. The controller provides the gate drive to ensure the FET is "ON" during forward conduction mode and off if the input is lower than the main output bus voltage.

Note the FET's are configured so current flows in the direction of the internal body – drain diode. The Rds is selected so Iout x Rds < diode forward drop in order to achieve the higher efficiency.

Recommended Best Practices:

With any of these load sharing methods, it is considered a good practice to arrange the wiring from each paralleled power supply to the system/load in lengths that match each other's. Also, besides a comparable wire length, it is as important to consider its gauge vs. the load current it has to carry as it is a ruling factor in controlling wire conduction losses. Conduction loses can creep up and develop a voltage drop level that may become out of range of the remote sensing capability specified for the power supply being used.

The following table (Table 1) below lists wire gauge in assorted lengths versus voltage drops for various load currents based on copper losses at a maximum ampacity of 250 mils per amp.

AWG Size	Number of Strands	Ohms Per 1,000 ft	Circular Mils	Ampacity 250mils per Amp	LOAD WIRE LENGHTS VS. ITS VOLTAGE DROPS							
					4.0"	8.0"	12.0"	16.0"	20.0"	24.0"	28.0"	32.0"
18	16/30	6.61	1600	6.4	0.0141	0.0282	0.0423	0.0564	0.0705	0.0846	0.0987	0.1128
16	26/30	4.07	2600	10.4	0.0141	0.0282	0.0423	0.0564	0.0705	0.0847	0.0988	0.1129
14	41/30	2.58	4100	16.4	0.0141	0.0282	0.0423	0.0564	0.0705	0.0846	0.0987	0.1128
12	65/30	1.63	6500	26.0	0.0141	0.0283	0.0424	0.0565	0.0706	0.0848	0.0989	0.1130
10	105/30	1.01	10500	42.0	0.0141	0.0283	0.0424	0.0566	0.0707	0.0848	0.0990	0.1131
8	133/29	0.635	16983	67.9	0.0144	0.0288	0.0431	0.0575	0.0719	0.0863	0.1007	0.1150

Table 1

The terminations of the wires and their contact connection losses are not accounted for in the figures of Table 1 above but should be considered as they may develop additional voltage drops.

CONSIDERATIONS AND LIMITATIONS

Number of Parallel Modules Recommended:

The *TU425-SERIES* allows the paralleling of up to four (4) equivalent modules to increase the overall power capability or for redundancy in an N+1 configuration. They are capable of actively load sharing between modules, up to 4, in steady state with an overall accuracy < 10% of each other for loads > 20% rated. The units will also share load dynamically.

NOTE: for inhibit/enable performance see *"Remote Control Inhibit/Enable"*

Output Voltage Adjustment:

Paralleled output voltages must be preset individually to within 0.5% of each other for an optimum load sharing behavior. The main output of the *TU425 SERIES* is adjustable by ±5% of its nominal voltage via an accessible potentiometer referenced as R326 that can be adjusted as necessary for the proper output voltage setting.

Analog Control Signals:

The *TU425-SERIES* Series is equipped with a 10 pin control signal header **(J401)** that provides both the analog control interface and the standby power interface.

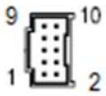

Voltage Remote Sense:

The main output of the *TU425-SERIES* is equipped with a Remote Sensing capability control that compensates for voltage drops up to 0.5V for the 48V and 56V models, and 0.16V for the 12V and 24V models between the main output terminals and the sensed voltage point at the system load. Consult the product data sheet to verify remote sense capability.

It is essential when paralleling multiple modules for load sharing <u>only</u> the S+ remote sense (J401 pin-1) terminal is to be connected respectively to the positive rail of the main output at the system load. Do not connect the S- remote sense (J401 pin-3), doing so may result in poor current share stability.

Load Share Bus (LSB):

The *TU425-SERIES* features a load-share controller that supports active current sharing through a single wire connection between the paralleled power supplies. The "LSB" J401 pin-4 allows the paralleling of up to four (4) modules to increase the overall power capability or for a configuration of N+1 for redundancy purposes. Care should be taken in the routing of J401 pin-4 from one unit to the J401 pin-4 of another as noise sources may adversely affect load share stability.

Note: Paralleled output voltages must be preset individually to within 0.5% of each other by adjusting the output voltage potentiometer R326.

Start-up Load Sharing Behavior:

The *TU425-SERIES* responds well during simultaneous start-up either during AC power On or via enable. The figures below show the system voltage and load during start up and after power on.

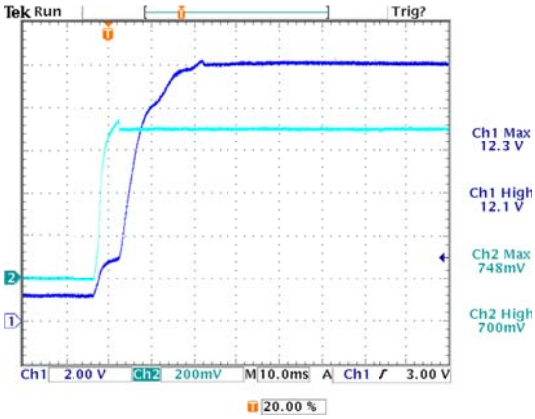

Figure 4.1 Ch1: Output Voltage and Ch2: System Load Current (1A/10mV) at Start-up of 4 Modules,74 amp load

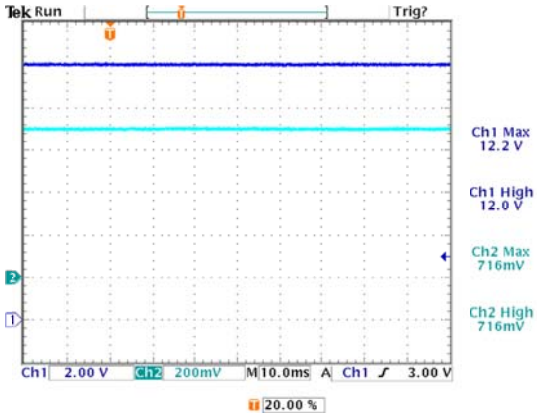

Figure 4.2 Ch1: Output Voltage and Ch2: System Load Current (1A/10mV) After Start-up of 4 Modules, 74 amp load.

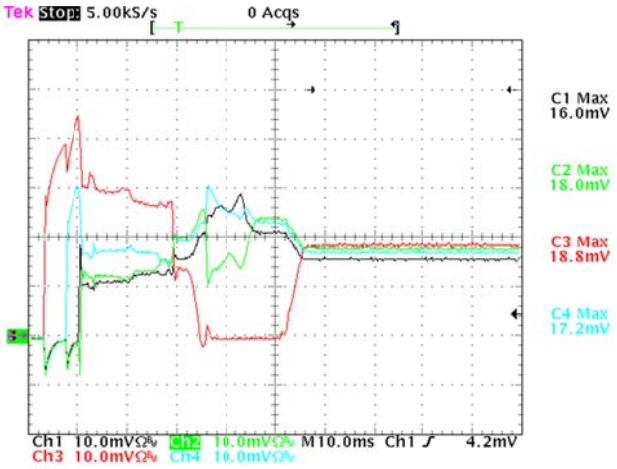

Figure 4.3 Load Current Share Start-up of 4 Modules. All Channels: 10A/10mV (840W)

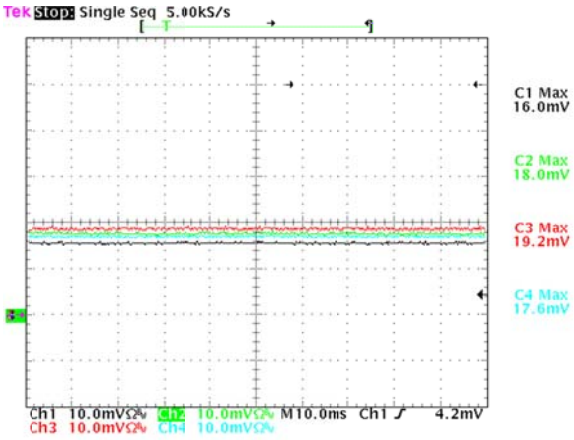

Figure 4.4 Load Current Share of 4 Modules After Start-up. All Channels: 10A/10mV (840W)

Figure 4: Start-up load sharing profile and behavior

Individual module current during start-up will have fluctuations for a short time while the current share controllers adjusts and settles into a stable operating point. This is normal behavior. Note the system load is stable as shown in figure 4.1

Remote Control Inhibit/Enable

Remote Inhibit is a TTL compatible active low input signal that allows the system or user to control the operating state of the TU425-SERIES. During application of an inhibit signal, the main output and the +12V Fan output will be disabled (turned off), however the 5Vsb output will continue to be available. The Remote Inhibit input (J401pin-5) is referenced to common on J401 pins 2 and 10.The 5Vsb can be diode OR'd but are not designed to current share. Do not direct wire OR the 5Vsb outputs together or exceed the current rate of one unit.

Consideration should be taken when independently inhibiting any of the load sharing parallel modules. The total system load should not exceed the rated load for the remaining active power supply modules.

When enabling, it is prudent not to re-enable any of the modules when the total system load exceeds 130% of the output rated current of a single module. If enabling occurs with loads above 130%, the modules may engage in load share instability and may only recover if the load is reduced to ~ 130% or the input power is recycled to all modules. The load can be increased after the module(s) is enabled. This only occurs when units have already powered up and then inhibited then re-enabled while other modules remain operating and the system load is > 130% of the module rating. Turn on with all modules enabled into any load not exceeding the total rating of the combined modules does not have this limitation. Also, enabling all modules at the same time does not exhibit this behavior.

Inhibit:

TU425S12E

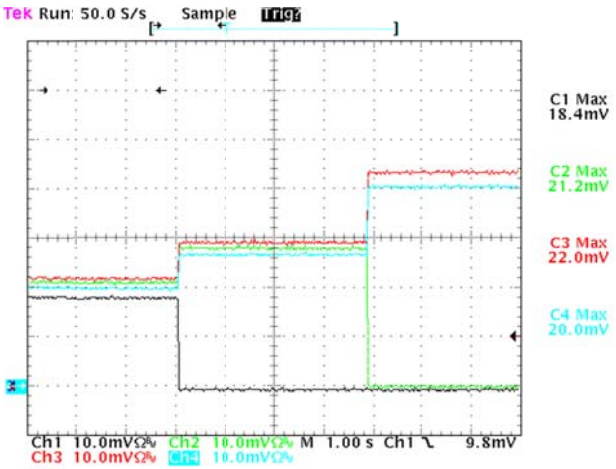

Figure 5.1 Inhibiting *PS1 and PS2*
Ch1: PS1, Ch2: PS2, Ch3: Ps3, Ch4: PS4 sharing 490W
All Channel represent current: 5A/10mV

TU425S12E

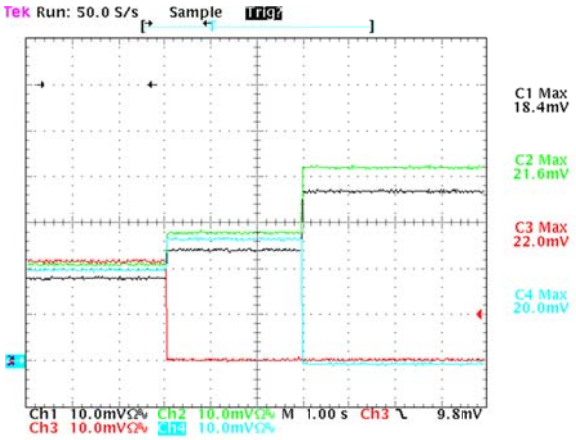

Figure 5.2 Inhibiting *PS3 and PS4*
Ch1: PS1, Ch2: PS2, Ch3: Ps3, Ch4: PS4 sharing 490W
All Channel represent current: 5A/10mV

Figure 5 above illustrates the load sharing of 490W by four (4) active modules (TU425S12E) and 2 of them are being inhibited while load sharing 490W.

Enable:

TU425S12E

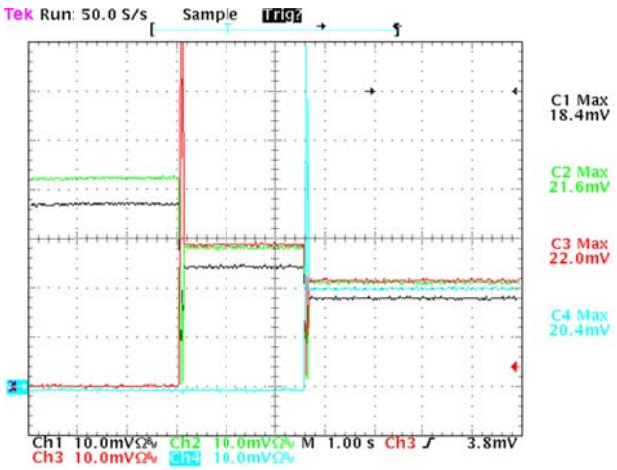

Figure 6.1 Enabling: *Ch3: Ps3 Ch4: PS4*
Ch1: PS1 sharing 490W with Ch2: PS2
All Channel represent current: 5A/10mV

TU425S12E

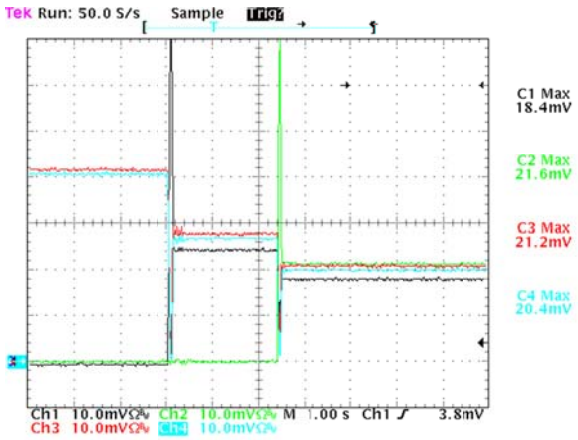

Figure 6.2 Enabling: *Ch1: Ps1 Ch2: PS2*
Ch3: PS3 sharing 490W with Ch4: PS4
All Channel represent current: 5A/10mV

Figure 6 above illustrates the load sharing of 490W by two (2) active modules (TU425S12E) and 2 other modules being enabled to this same load of 490W which is ~130% of the rated load for a a single module.

Minimum Load Sharing Performance:

Due to the inherent high efficiency conversion topology of the *TU425-SERIES*, at light loads (up to approximately 18% rated load), the units operate in a quasi-burst mode. The energy is provided in bursts and since the parallel power supplies will do this asynchronously, ***it is normal*** for some current flow between units as well as to the load. At very light load, some units will not provide current but will remain in regulation redundantly ready to share any rising demand of load current. Above 18% of the combined rated load, all active parallel units will be operating in a constant load sharing mode.

TU425S12E _Four Modules Rising Light Load Current Sharing Performance

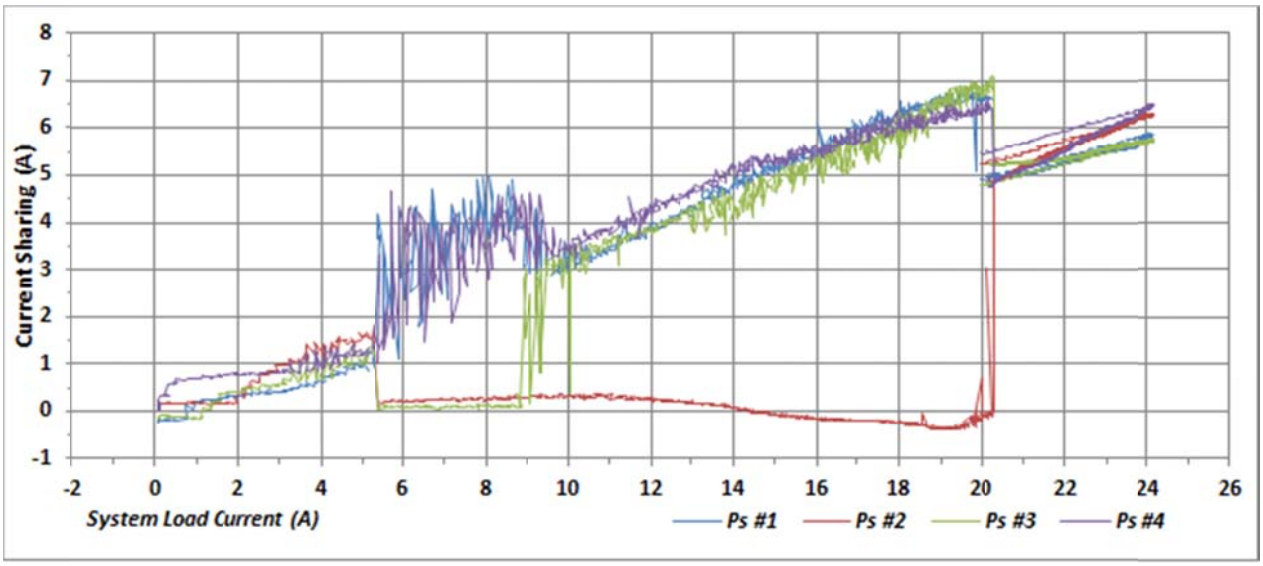

TU425S12E _Four Modules Falling Light Load Current Sharing Performance

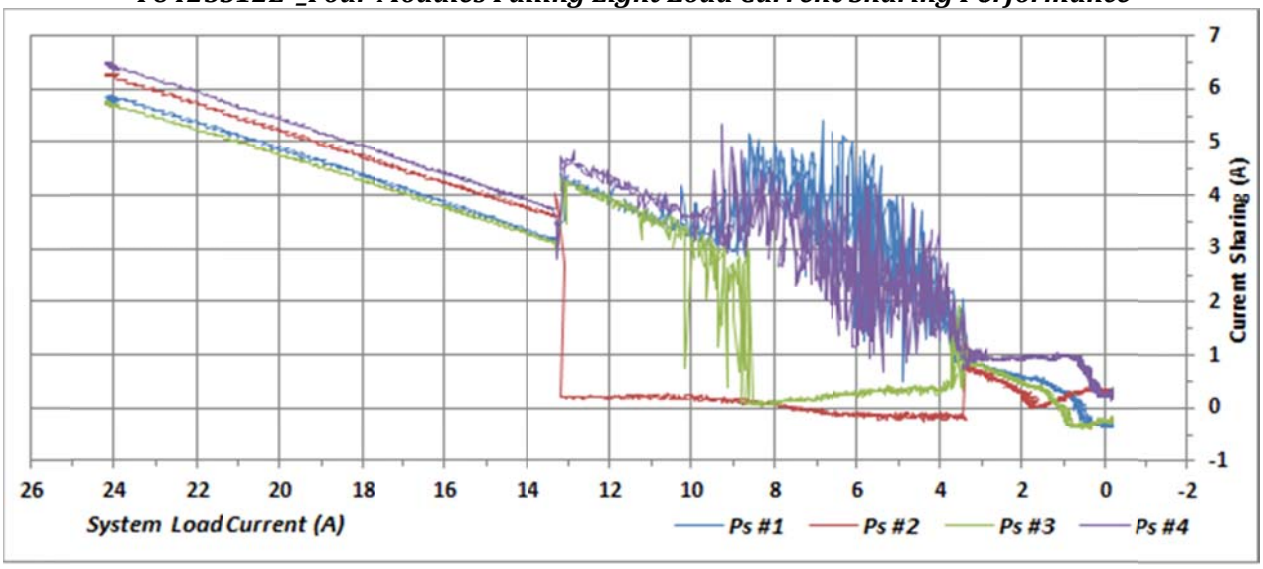

Figure 7 Low load current share as a function of load.